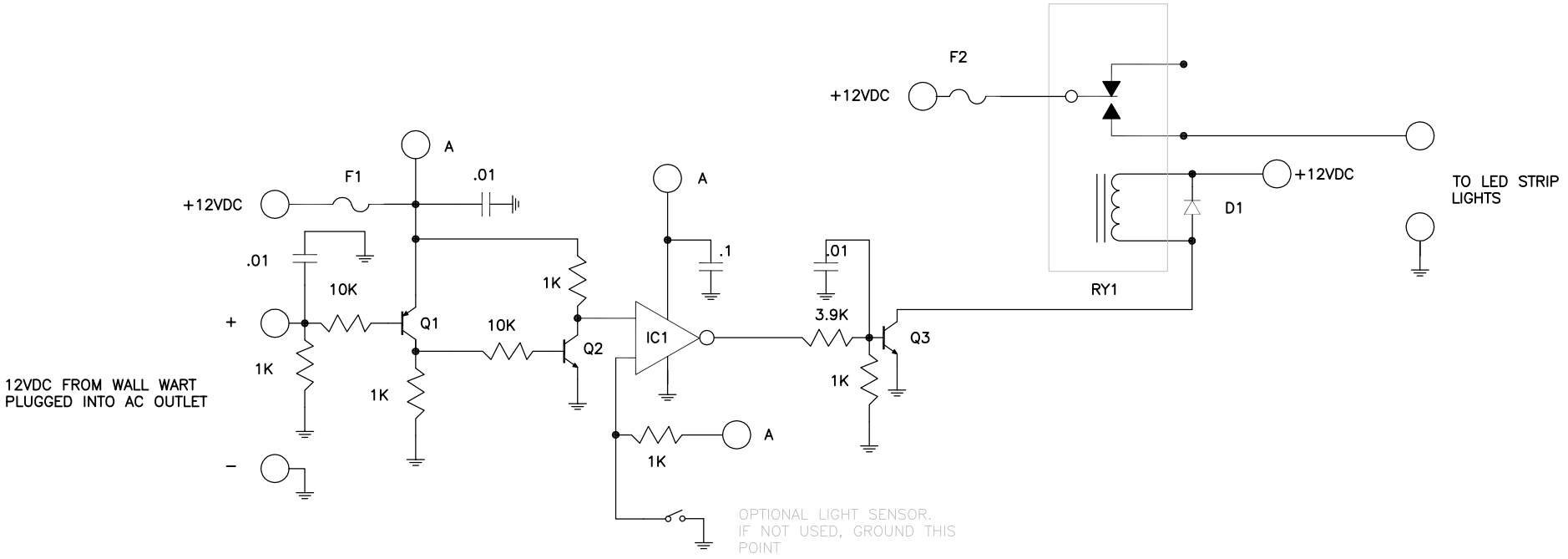

Q1 2N3906
Q2 2N3904
Q3 TIP3055 (USE SMALL HEATSINK)
IC1 74C02
D1 1N4001–7
F1 1A GLASS FUSE
F2 GLASS FUSE, DEPENDING ON # OF LED LIGHTS
RY1 1PST 12VDC RELAY, 5–10A
ALL RESISTORS 1/4 WATT
CAPACITORS IN uF, 25V

LOSS OF AC POWER VIA WALL WART CAUSES
Q3 TO TURN ON, ENERGIZING THE RELAY.
I USED A P&B OCTAL 10A RELAY. 12VDC IS
FROM A BATTERY SOURCE SUCH AS SOLAR.

NOTE 2020: THIS CIRCUIT HAS BEEN IN OPERATION
FOR 5+ YEARS WITH NO FAILURES AND COUNTLESS POWER OUTAGES.

EMERGENCY LIGHT CONTROLLER	
N1PS	
SEE UTUBE VIDEO ALSO	NOVEMBER 2014
	REV 0
	SHT 1 of 1